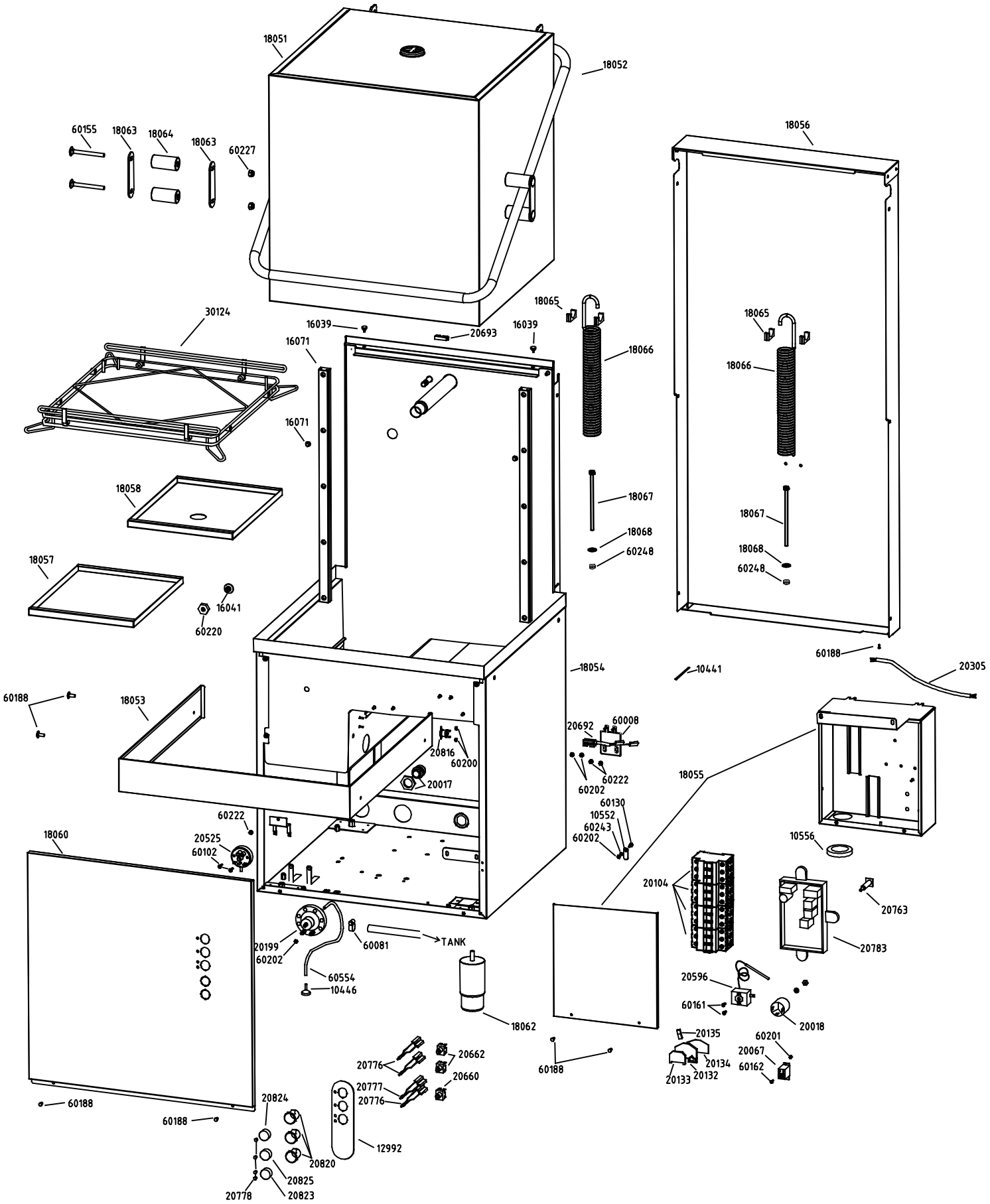
18051
18052
60155
18063
18064
18063
60227
18056
18065
18066
18065
18066
30124
16039
20693
16039
16071
16071
18058
18067
18067
18068
60248
18068
60248
18057
16041
60220
60188
20305
18054
10441
60188
18053
20692
60008
20816
60200
20017
60222
60202
18055
60130
10552
60243
60202
60222
18060
20525
60102
10556
20104
20763
20783
20199
60202
60081
TANK
60554
10446
20596
60161
20018
18062
20135
60201
20067
60162
20134
20133
20132
60188
20776
20662
20777
20776
20660
60188
60188
20824
12992
20820
20825
20778
20823

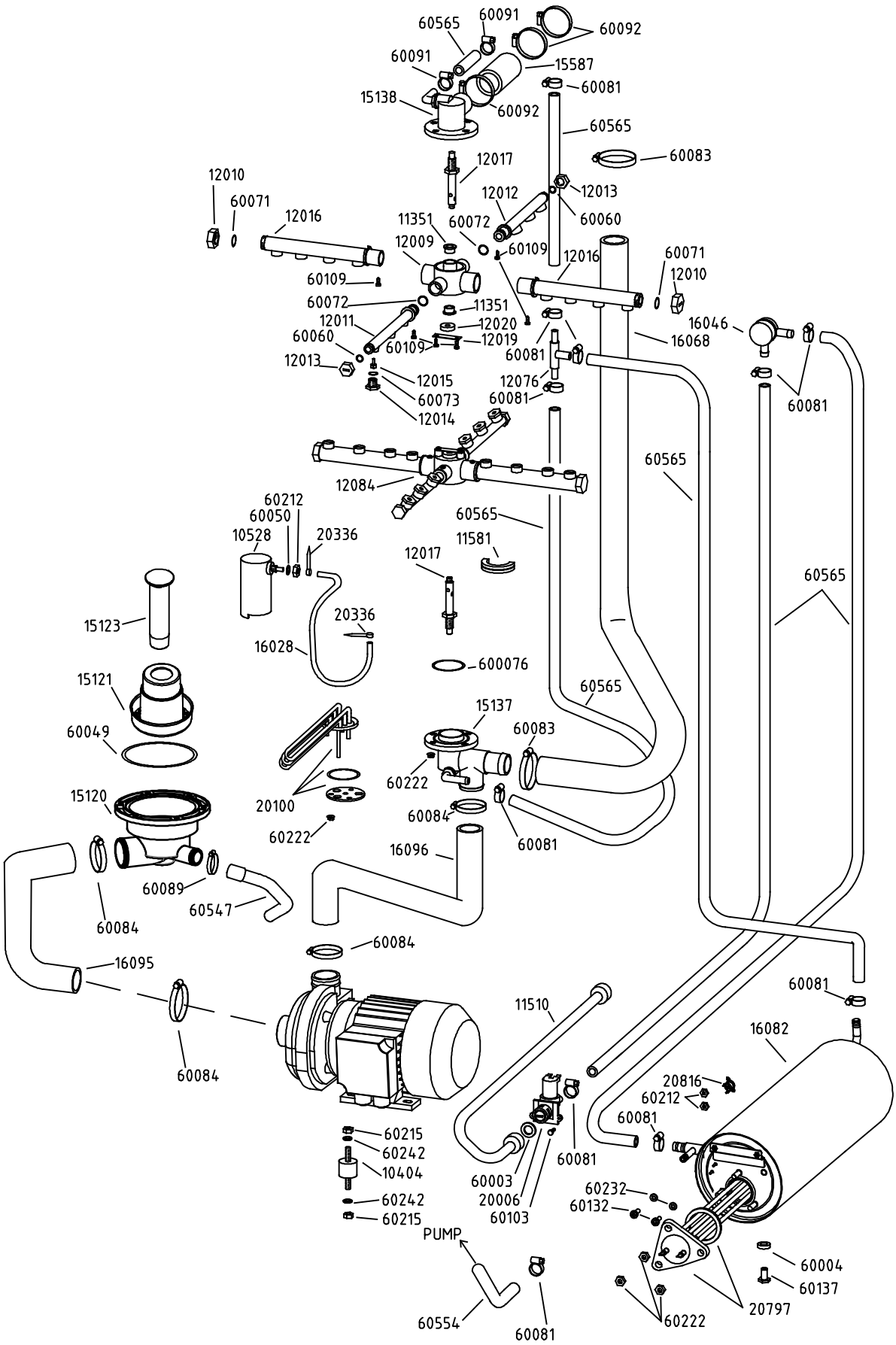
60565
60091
60092
60091
15587
60081
15138
60092
60565
60083
12017
12010
12013
60071
12012
12016
60060
11351
60072
12009
60109
12016
60071
60109
12010
60072
11351
12011
12020
16046
60060
60109
12019
16068
60081
12013
12015
12076
60073
60081
60081
12014
60565
12084
60212
60050
60565
10528
20336
11581
12017
60565
15123
20336
16028
600076
15121
60565
15137
60049
60083
60222
20100
15120
60084
60222
60081
16096
60089
60547
60084
60084
16095
60081
11510
16082
60084
20816
60212
60081
60215
60242
60081
10404
60003
60232
20006
60132
60242
60103
60215
PUMP
60004
60137
60554
60081
60222
20797

Drain Pump Version

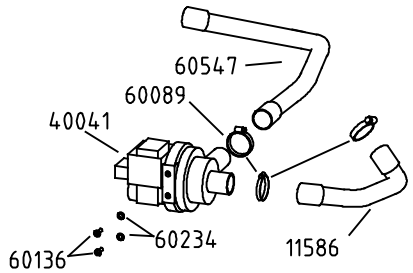

Detergent Pump Version

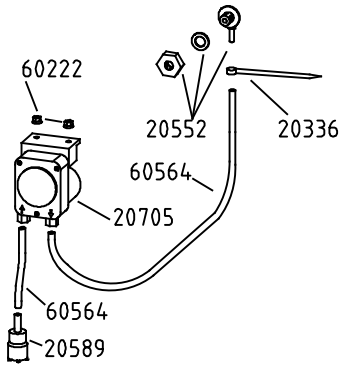

Rinse Aid Version

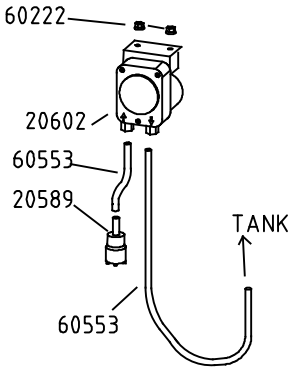

Water Softener Version

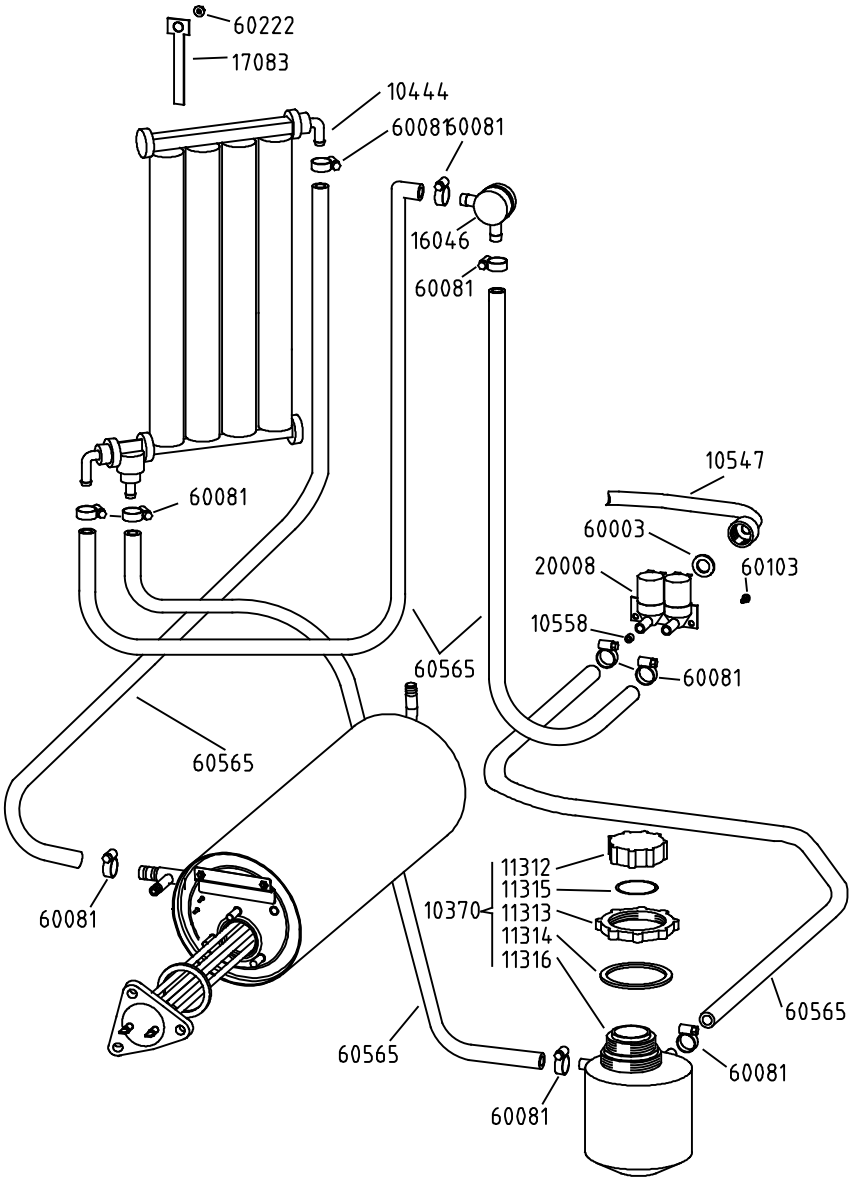

Optionals switches

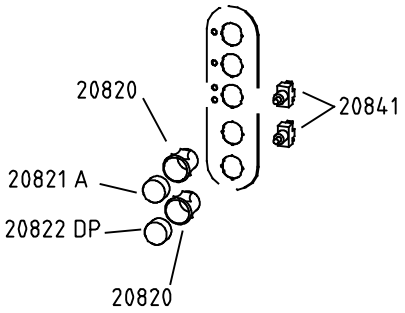

Rinse Pump Version

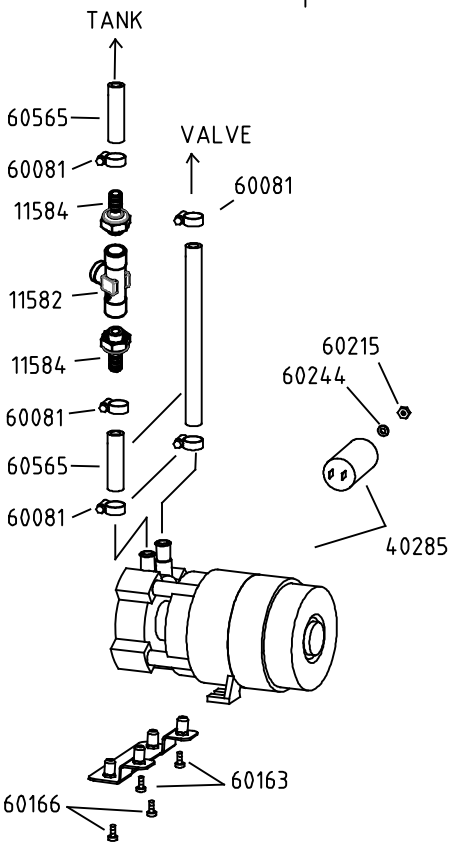

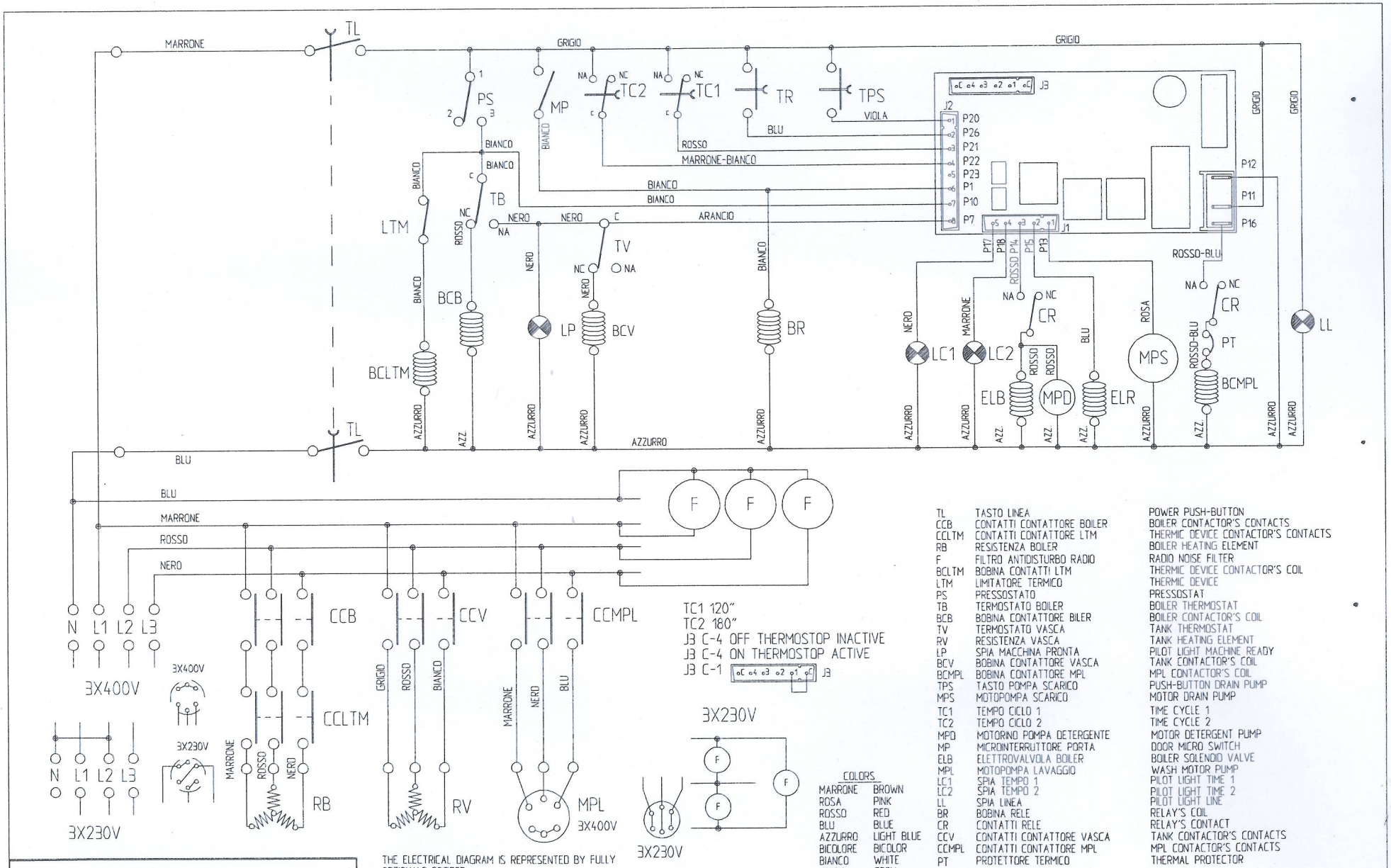

TL	TASTO LINEA	POWER PUSH-BUTTON
CCB	CONTATTI CONTATTORE BOILER	BOILER CONTACTOR'S CONTACTS
CCLTM	CONTATTI CONTATTORE LTM	THERMIC DEVICE CONTACTOR'S CONTACTS
RB	RESISTENZA BOILER	BOILER HEATING ELEMENT
F	FILTRO ANTIDISTURBO RADIO	RADIO NOISE FILTER
BCLTM	BOBINA CONTATTI LTM	THERMIC DEVICE CONTACTOR'S COIL
LTM	LIMITATORE TERMICO	THERMIC DEVICE
PS	PRESSOSTATO	PRESSOSTAT
TB	TERMOSTATO BOILER	BOILER THERMOSTAT
BCB	BOBINA CONTATTORE BILER	BOILER CONTACTOR'S COIL
TV	TERMOSTATO VASCA	TANK THERMOSTAT
RV	RESISTENZA VASCA	TANK HEATING ELEMENT
LP	SPIA MACCHINA PRONTA	PILOT LIGHT MACHINE READY
BCV	BOBINA CONTATTORE VASCA	TANK CONTACTOR'S COIL
BCMPL	BOBINA CONTATTORE MPL	MPL CONTACTOR'S COIL
TPS	TASTO POMPA SCARICO	PUSH-BUTTON DRAIN PUMP
MPS	MOTOPOMPA SCARICO	MOTOR DRAIN PUMP
TC1	TEMPO CICLO 1	TIME CYCLE 1
TC2	TEMPO CICLO 2	TIME CYCLE 2
MPD	MOTORINO POMPA DETERGENTE	MOTOR DETERGENT PUMP
MP	MICROINTERRUTTORE PORTA	DOOR MICRO SWITCH
ELB	ELETTROVALVOLA BOILER	BOILER SOLENOID VALVE
MPL	MOTOPOMPA LAVAGGIO	WASH MOTOR PUMP
LC1	SPIA TEMPO 1	PILOT LIGHT TIME 1
LC2	SPIA TEMPO 2	PILOT LIGHT TIME 2
LL	SPIA LINEA	PILOT LIGHT LINE
BR	BOBINA RELE	RELAY'S COIL
CR	CONTATTI RELE	RELAY'S CONTACT
CCV	CONTATTI CONTATTORE VASCA	TANK CONTACTOR'S CONTACTS
CCMPL	CONTATTI CONTATTORE MPL	MPL CONTACTOR'S CONTACTS
PT	PROTETTORE TERMICO	THERMAL PROTECTOR

COLORS

MARRONE	BROWN
ROSA	PINK
ROSSO	RED
BLU	BLUE
AZZURRO	LIGHT BLUE
BICOLORE	BICOLOR
BIANCO	WHITE
GRIGIO	GREY
NERO	BLAK
VIOLA	VIOLET
ARANCIONE	ORANGE

THE ELECTRICAL DIAGRAM IS REPRESENTED BY FULLY OPTIONALS EQIPPED.

Lo schema rappresenta la macchina nella sua versione piu complessa sui modelli derivati più semplici mancheranno alcuni componenti con le relative connessioni.

NL 1000 2016 3PH+N